Power

File: power.kicad_sch

User Input

File: user_input.kicad_sch

MCU

File: microcontroller.kicad_sch

Motor Driver

File: motor_driver.kicad_sch

Indicators

File: indicators.kicad_sch

Mounting points

M3 for threaded inserts
M2 for board support

M3 holes	M2 holes
H1 MountingHole	H5 MountingHole
H2 MountingHole	H6 MountingHole
H3 MountingHole	
H4 MountingHole	

Fiducials

FID1 Fiducial
FID2 Fiducial
FID3 Fiducial

SJFOM

Sheet: /
File: StepUp.kicad_sch

Title: System diagram

Size: A4	Date: 2025-03-03	**Rev: v0.3**
KiCad E.D.A. 9.0.7		Id: 1/6

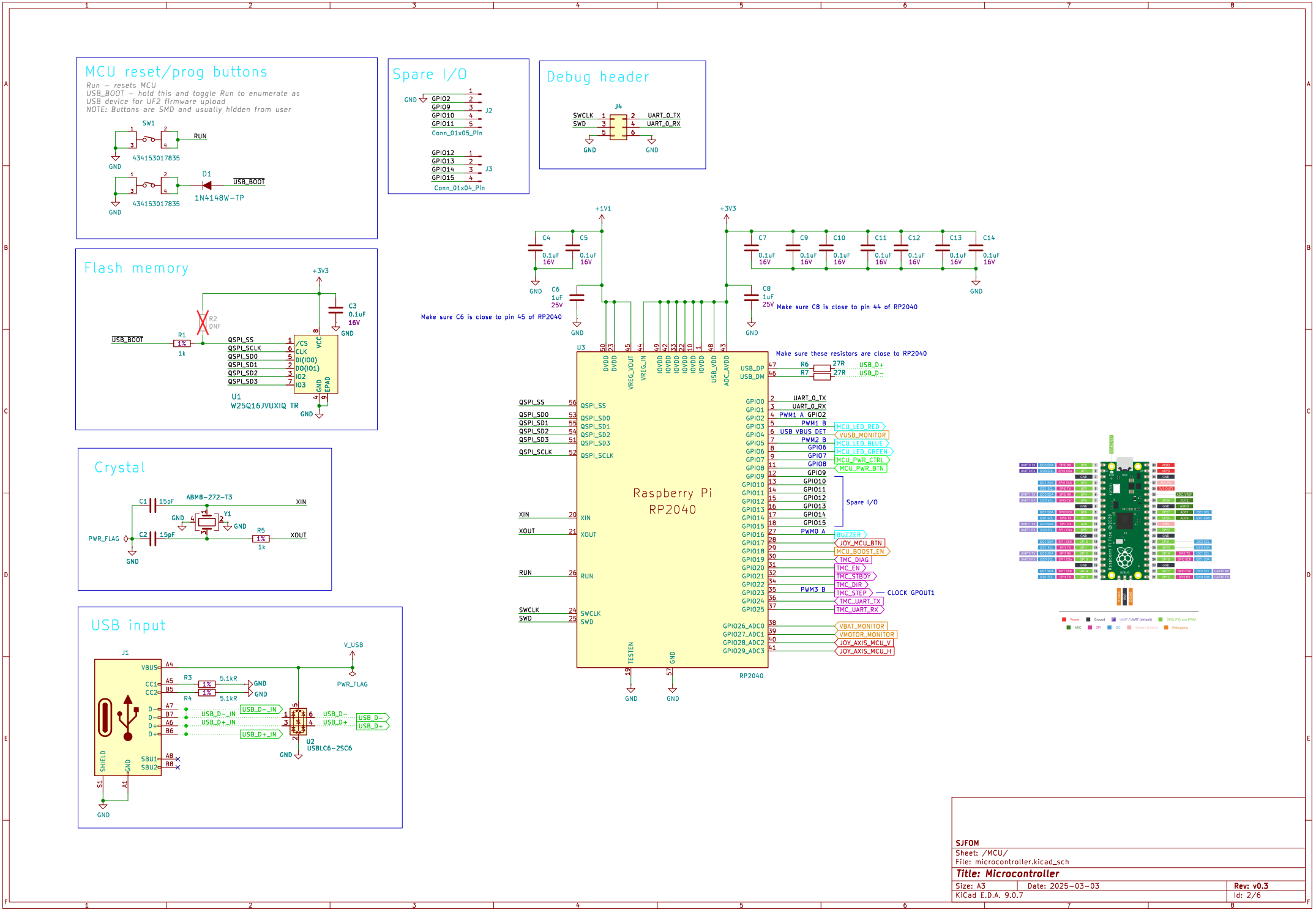

SJFOM	
Sheet: /MCU/	
File: microcontroller.kicad_sch	
Title: Microcontroller	
Size: A3	Date: 2025-03-03
KiCad E.D.A. 9.0.7	Id: 2/6
Rev: v0.3	

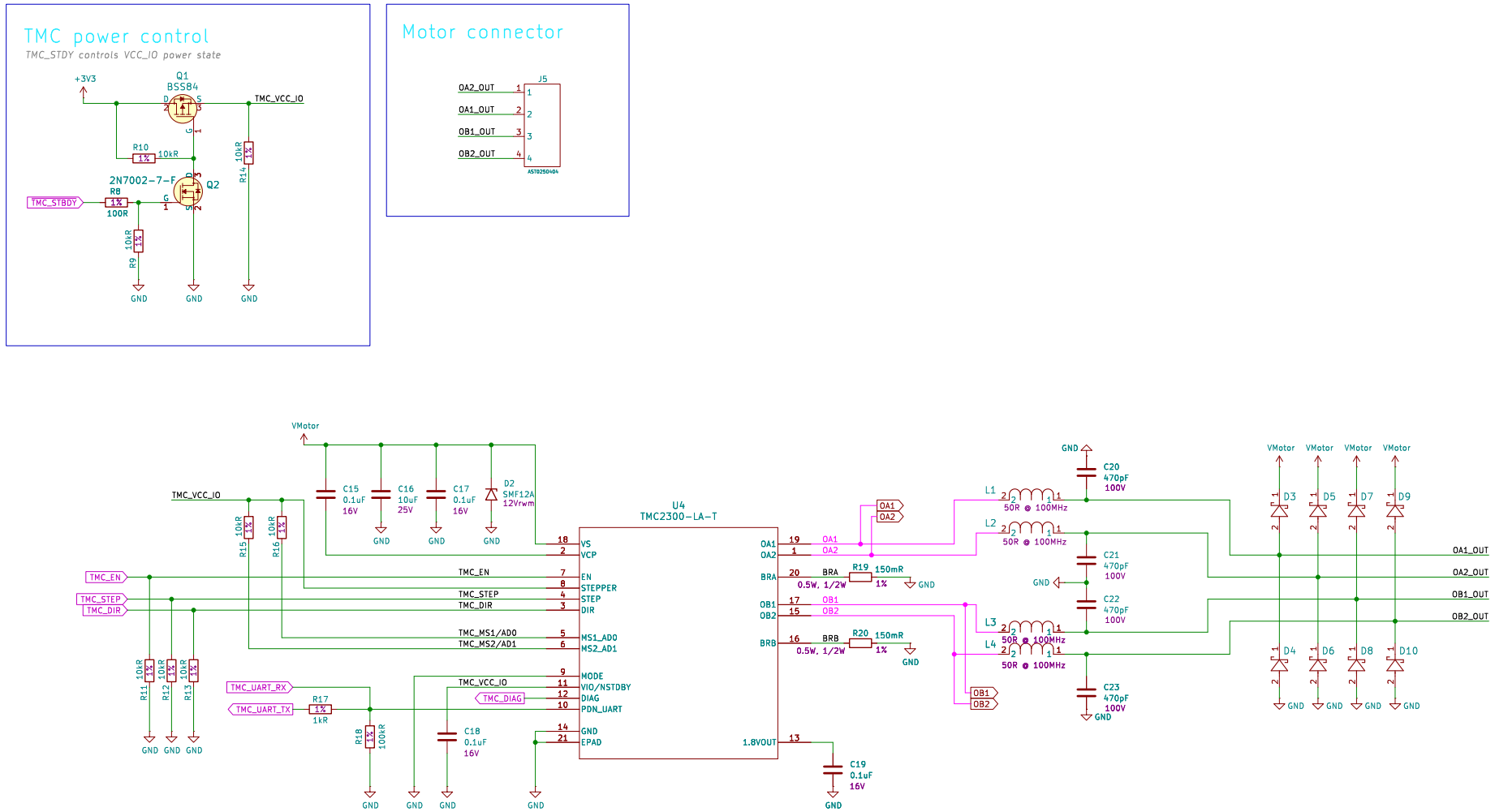

SJFOM		
Sheet: /Motor Driver/		
File: motor_driver.kicad_sch		
Title: Motor Driver		
Size: A3	Date: 2025-03-03	Rev: v0.3
KiCad E.D.A. 9.0.7		Id: 3/6

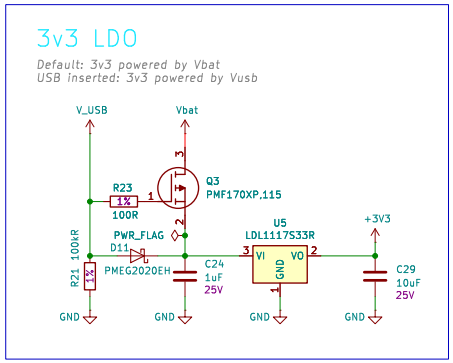

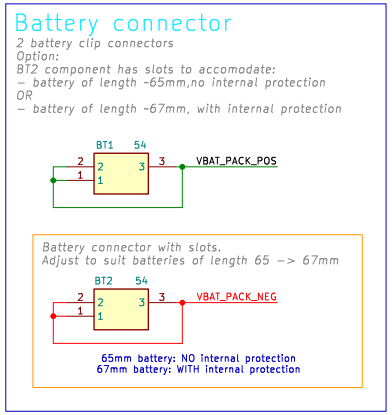

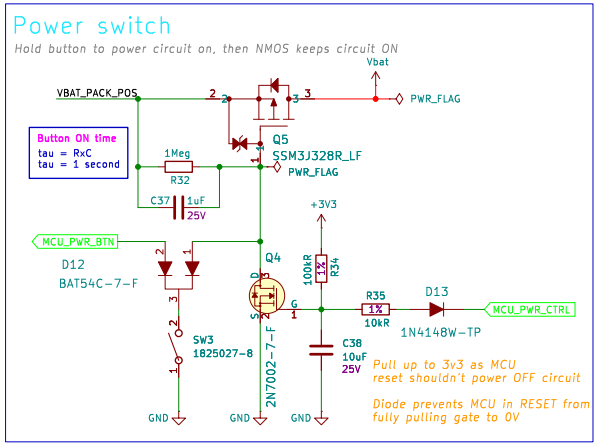

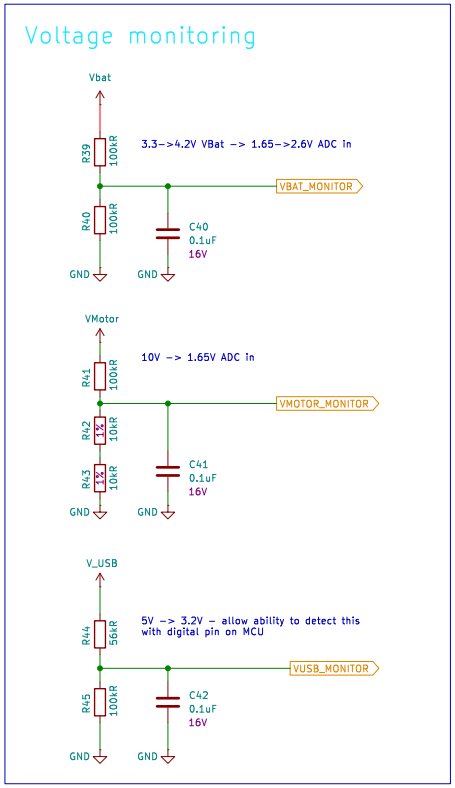

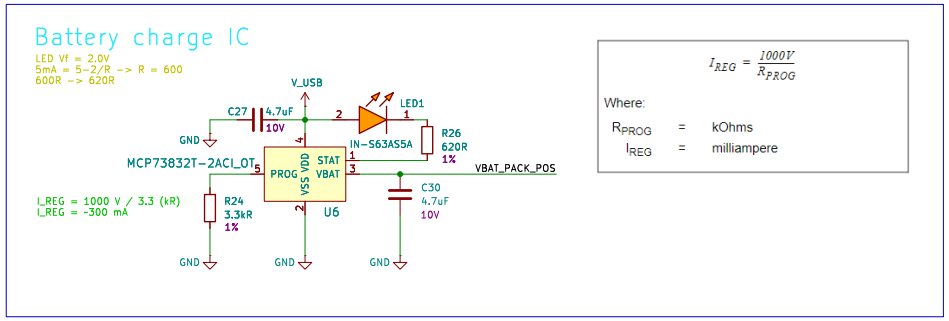

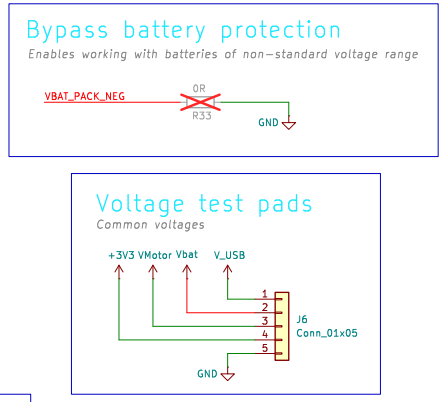

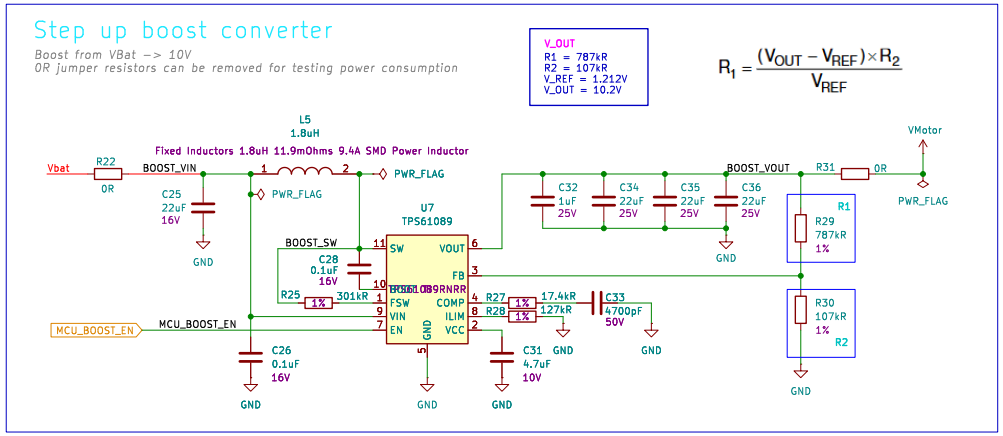

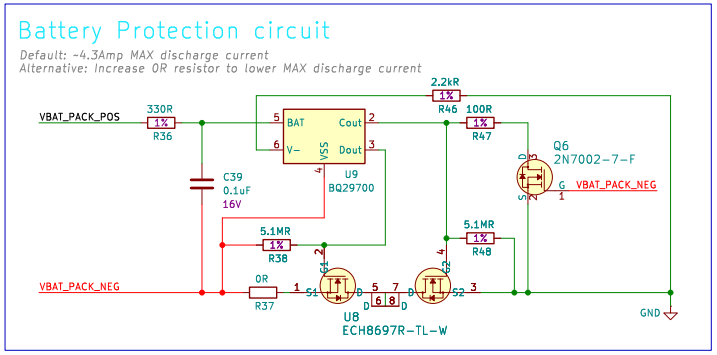

SJFOM	
Sheet: /Power/	
File: power.kicad_sch	
Title: Power	
Size: A3 Date: 2025-03-03	Rev: v0.3
KiCad E.D.A. 9.0.7	Id: 4/6

Status LED's

Status LEDs, RGB 3-in-1, through-hole, clear dome

LED resistor calculations (matching mcd values)

RED – 20mA = 600 mcd → 1mA = 30mcd
– 300mcd = 10mA
– Vf=2V (typ), 3.3–2V = 1.3V/10mA = 130R → 120R

BLUE – 20mA = 300 mcd → 1mA = 15 mcd
– 300mcd = 20mA
– Vf=3V (typ), 3.3–3V = 0.3V/20mA = 15R → 22R

GREEN – 20mA = 1300 mcd → 1mA = 65 mcd
– 300mcd = 4.6mA
– Vf=3V (typ), 3.3–3V = 0.3V/4.6mA = 65R → 60R

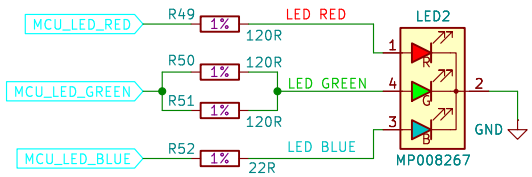

Buzzer

To indicate device states, f = 4kHz
~10V from the boost converter also used for the buzzer

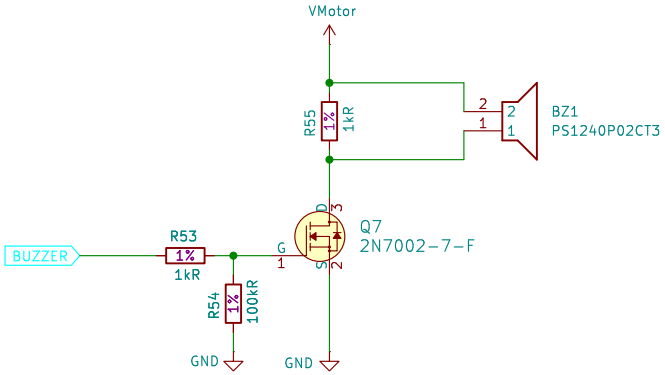

SJFOM

Sheet: /Indicators/
File: indicators.kicad_sch

Title: User Input

Size: A4	Date: 2025-03-03	**Rev: v0.3**
KiCad E.D.A. 9.0.7		Id: 5/6

Joystick

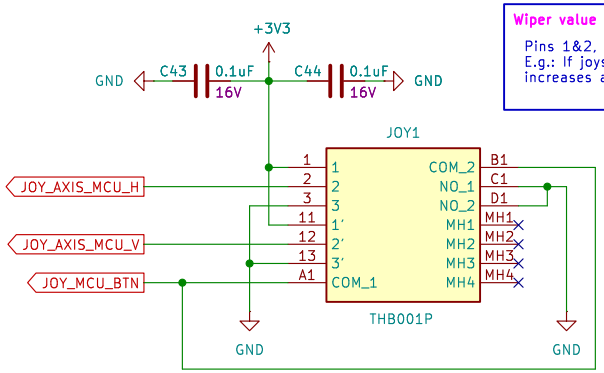

Wiper value

Pins 1&2, resistance goes down as wiper moved in that direction
E.g.: If joystick has pin 1 = 3v3 and pin 3 = GND, pin 2 voltage increases as josytick moved to pin 1, decreases as moved to pin 3

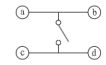

Circuit diagram

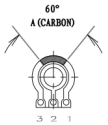

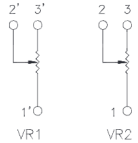

SJFOM

Sheet: /User Input/
File: user_input.kicad_sch

Title: User Input

Size: A4	Date: 2025-03-03	**Rev: v0.3**
KiCad E.D.A. 9.0.7		Id: 6/6